Application Profile

PULVERIZED COAL SYSTEMS

TYPICAL INDUSTRIES SERVED

- Power
- Steel/Iron
- Cement

INTRODUCTION

The pulverization of coal to improve burning efficiency and maximize energy output is a method that has been used for more than 75 years. Pulverized coal processing and storage systems are typically found in power generation, steel and iron manufacturing, cogeneration, cement drying, and other industries that employ injection furnaces.

Compliance with the Clean Air Act Amendments (CAAA) of 1990 has moved many facility operators to switch fuels from high-sulfur (bituminous) coal to low-sulfur (sub-bituminous) coal to reduce emissions of sulfur dioxide and nitrogen oxides. Compliance with Phase II of the CAAA is required January 1, 2000.

For all its advantages, the pulverizing process, as well as the conveying and storing of pulverized coal, poses substantial explosion hazards. Many installations include some prevention strategies, such as inerting systems, but these system only minimize the occurrence of explosions.

The purpose of this application guide is to provide an understanding of the possible explosion hazards and protection solutions for pulverized coal systems. This document is intended to be a guideline and is not applicable to all situations. If you have any questions, please contact the Fike Explosion Protection group or our sales representative in your area.

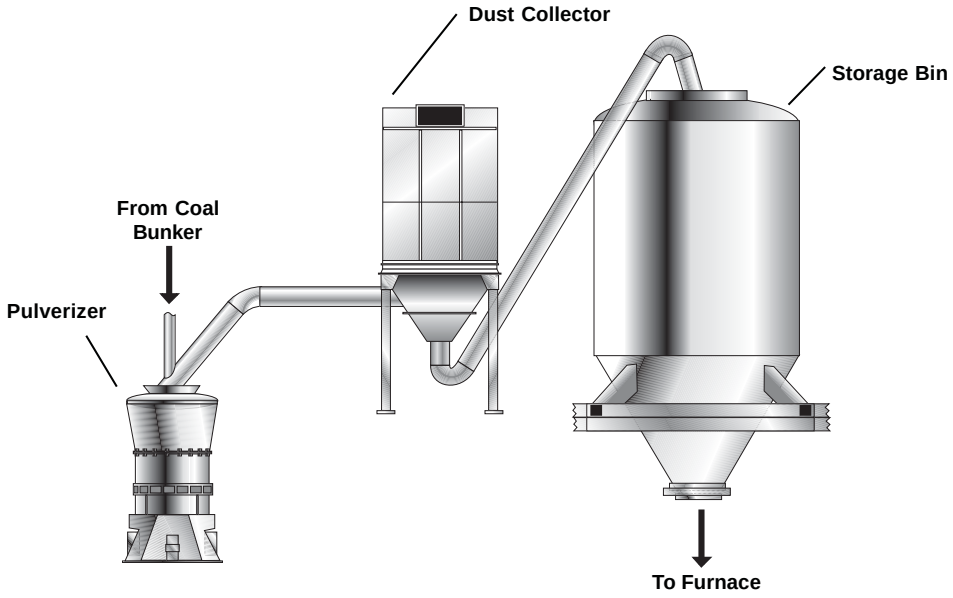

Figure 1: Schematic of a typical coal processing and storage system.

Form No. EAP 1004

THE PROBLEM: DEFLAGRATION (EXPLOSION)

Coal has been pulverized (crushed) since 1924 to produce a more efficient fuel. The potential for explosions in pulverized coal processes is well known. Equipment such as crushers, pulverizers, and conveyors all contribute tot he creation of dust. When this coal dust is suspended in air (in the pulverizer, conveying lines, bag filters, cyclones, and storage bins) and an ignition occurs, there is the potential for explosion.

The trend to switch to sub-bituminous coal (lower sulfur) addresses the environmental concerns, however the degree of explosion hazard is greatly increased compared to bituminous coal (see table 1). In steel making, the conversion of using coal in lieu of coke also increases the potential for explosion due to the higher explosibility ratings for coal. (see table 1).

This application bulletin outlines responsive protection strategies for the primary areas of explosion potential: pulverizing, conveying, and dust collection/storage.

Table One: Coal & Coke Explosibility Characteristics

	Bituminous Coal	Sub-Bituminous Coal	Coke	Ref.
Physical Characteristics	Moderate dusting, relatively free flowing	Heavy dusting, cohesive, poorly flowing	N/A	1
Auto-Ignition Time	90 to 120 days	15 to 30 days	N/A	1
Auto-Ignition Temperature	870°F (466°C)	765°F (407°C)	N/A	1
K_{st} (Explosibility Constant)	129 bar-m/sec	209 bar-m/sec	74 bar-m/sec	2, 3
Dust Hazard Class	St-1	St-2	St-1	3
P_{max} (Maximum Explosion Press)	133 psig (0.2 barg)	104 psig (7.2 barg)	110 psig (7.6 barg)	2, 3

REFERENCES:

1 - Power Engineering, August, 1994, "Fire Protection Considerations When Switching Fuels", by James B. Biggins;
2 - Determined by ASTM E1226 (ISO 6184/1) test methods at Fike corporation;
3 - NFPA 68

THE SOLUTION: PROTECTING THE PULVERIZER

Explosion venting of the pulverizer is not allowed per NFPA 8503, so this equipment is best protected by either containment (tested to 200 psi), or an Explosion Suppression System. System operation follows these steps:

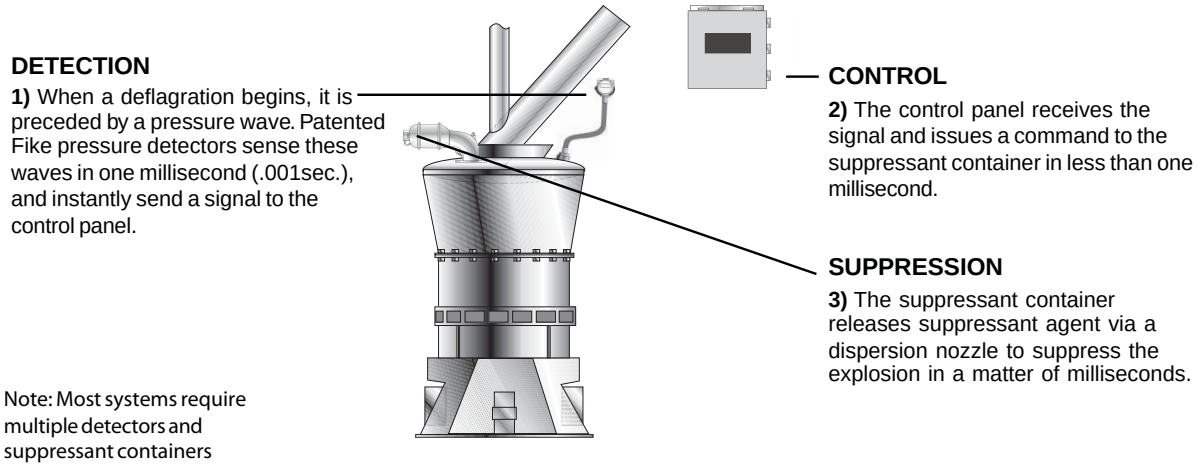

Figure 2: Pulverizer Protected by Explosion Suppression

PROTECTING THE CONVEYING LINES

Connected ductwork is best protected by a Chemical Explosion Isolation System. System operation follows these steps:

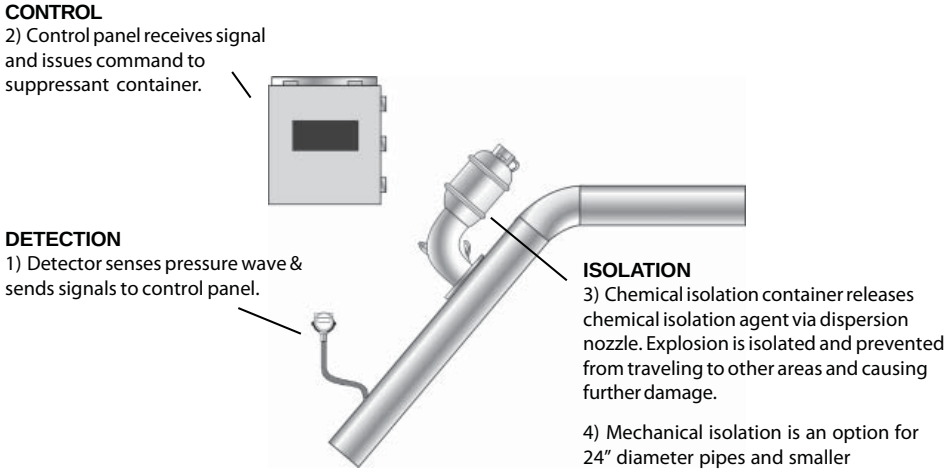

Figure 3: Chemical Isolation applied to conveying lines

PROTECTING THE DUST COLLECTOR/COAL STORAGE BIN

Dust collection and storage bins are best protected by either

1) Explosion Vents and/or an
2) Explosion Suppression System

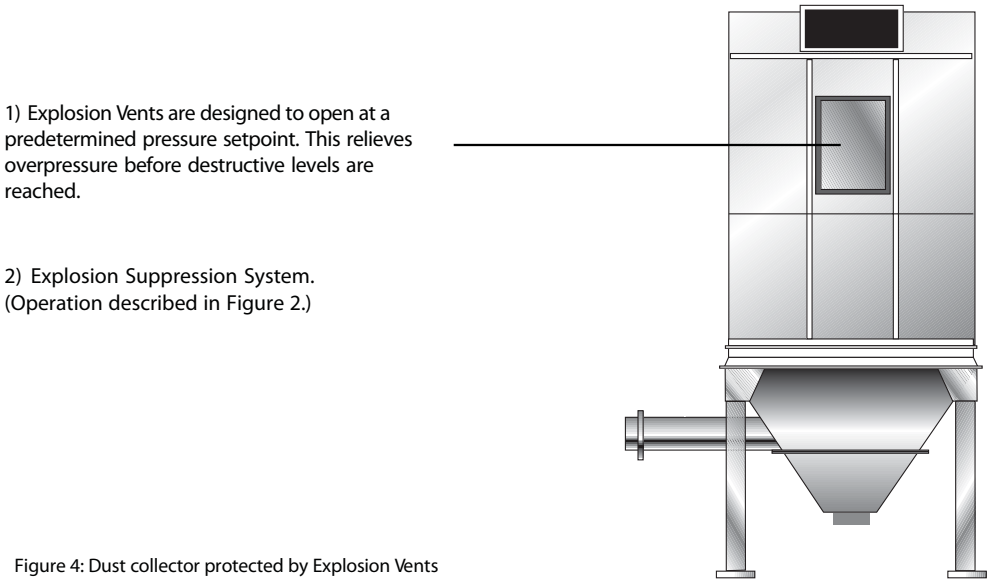

Figure 4: Dust collector protected by Explosion Vents

Copyright © Fike Corporation All Rights Reserved.
Form No. EAP 1004 August, 1999 Specifications are subject to change without notice.